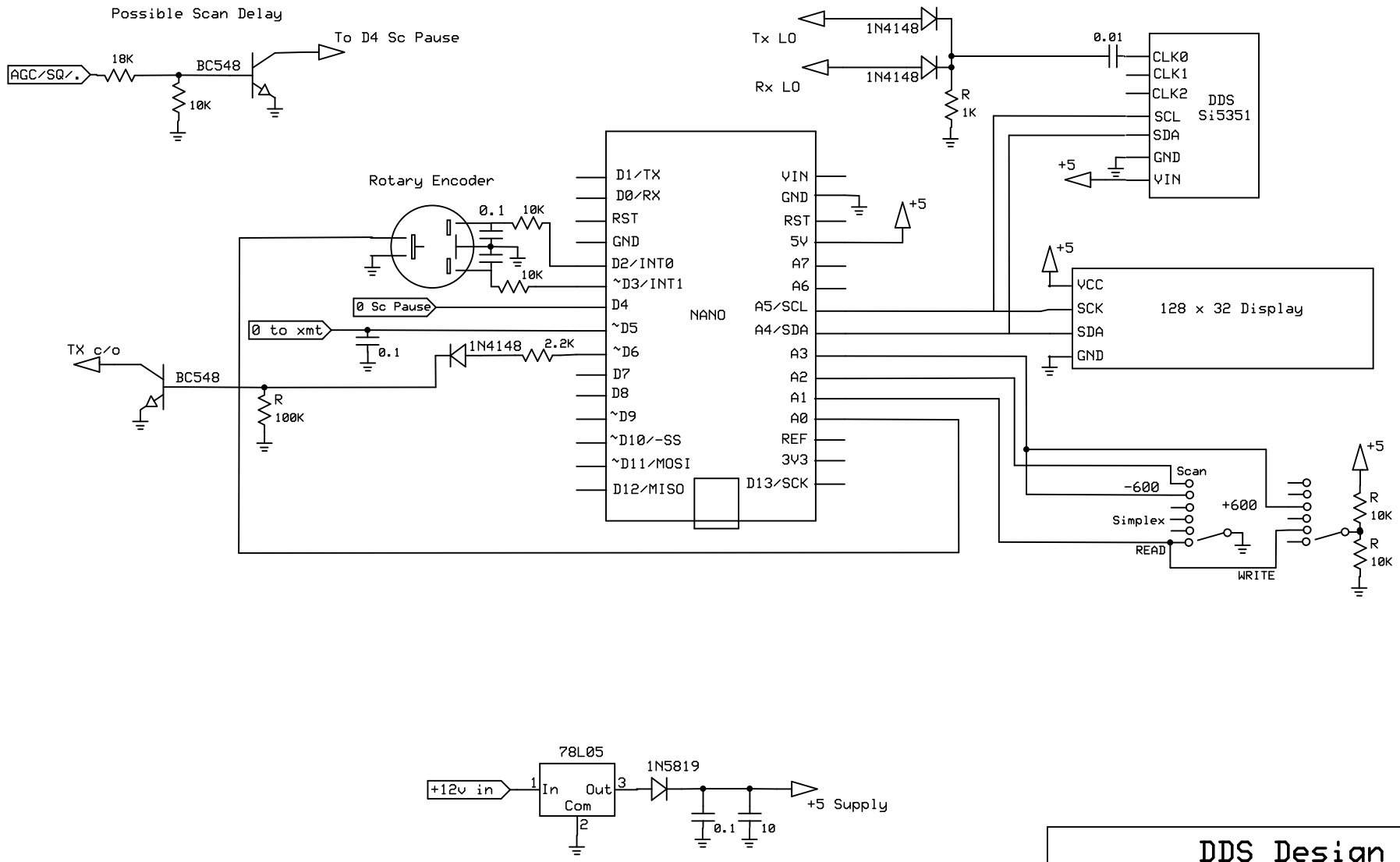

DDS Design

TAIT T198 DDS

David McMillan	Rev 1.0 24/09/2019	Page 1 of 1